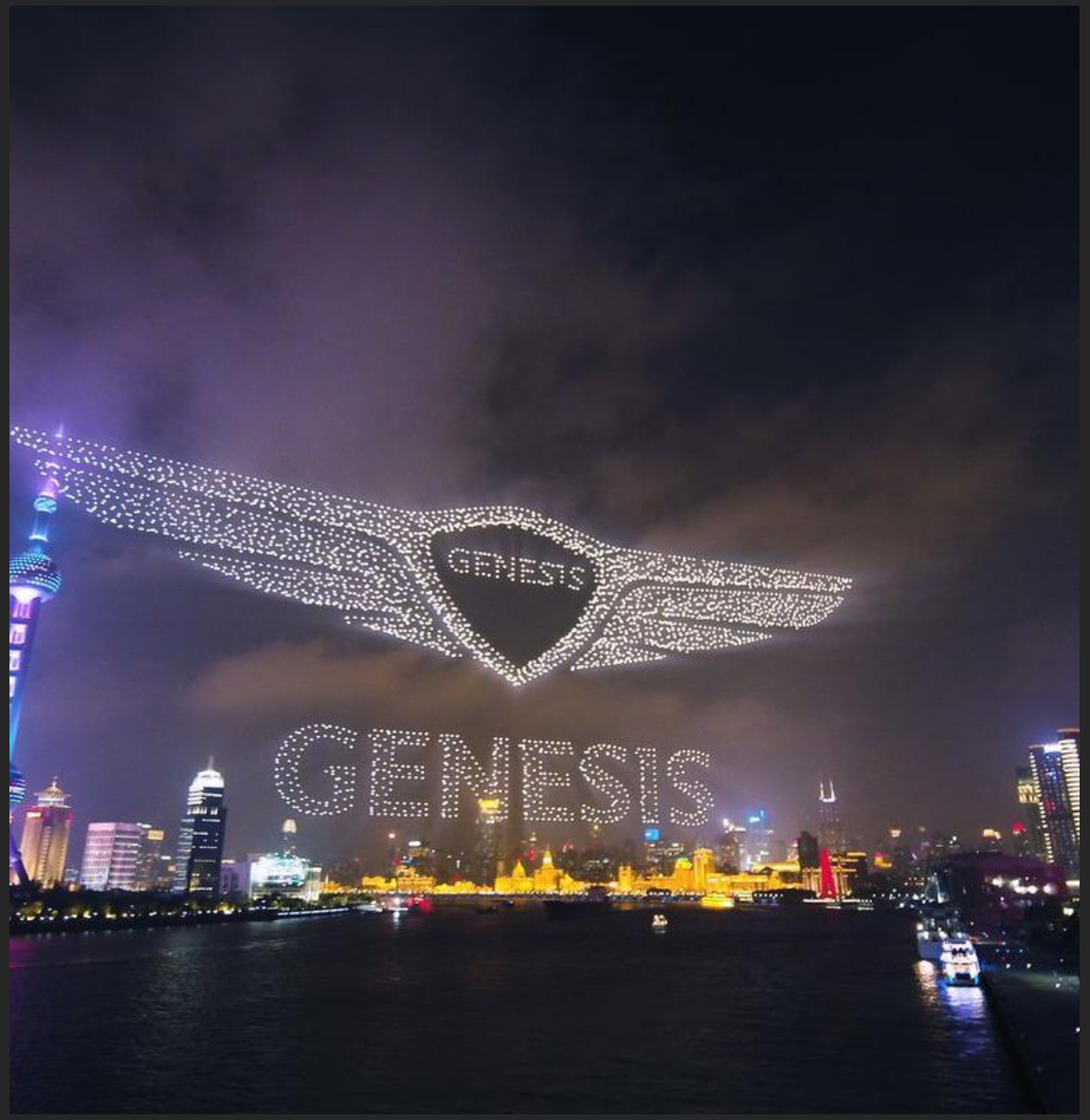
GENESIS
GENESIS

Detection is not enough: Attack Recovery for Safe and Robust Autonomous Robotic Vehicles

Pritam Dash, University of British Columbia

Perception in Robotic Vehicles (RV)

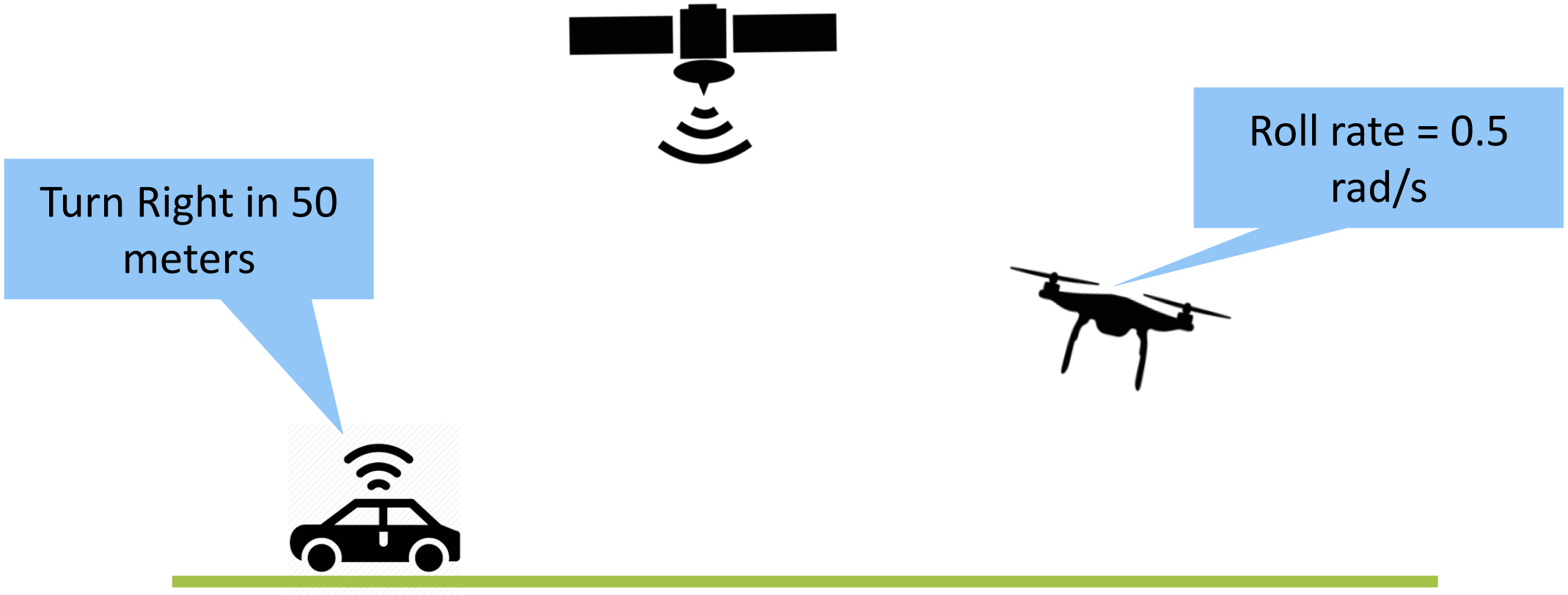

Sensor Attacks Against Robotic Vehicles (RV)

GPS Spoofing.
Transmit malicious GPS Signals

Actual Position

Spoofed Position

Tippenhauer et. al. On the requirements for successful GPS spoofing attacks. CCS'11

Sensor Attacks Against Robotic Vehicles (RV)

Signal Injection.
Optical, Magnetic or Acoustic noise

Son et. al. Rocking Drones with Intentional Sound Noise on Gyroscopic Sensors. Usenix Security'2015

Sensor Attacks and Consequences

Iran–U.S. RQ-170 incident

ACM TECHNEWS

GPS Cyberattack Falsely Placed U.K. Warship Near Russian Naval Base

Risks for Industrial/Civilian Robotic Vehicles?

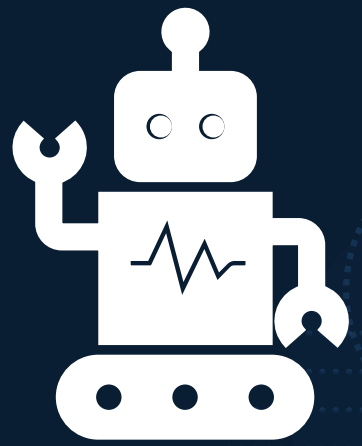

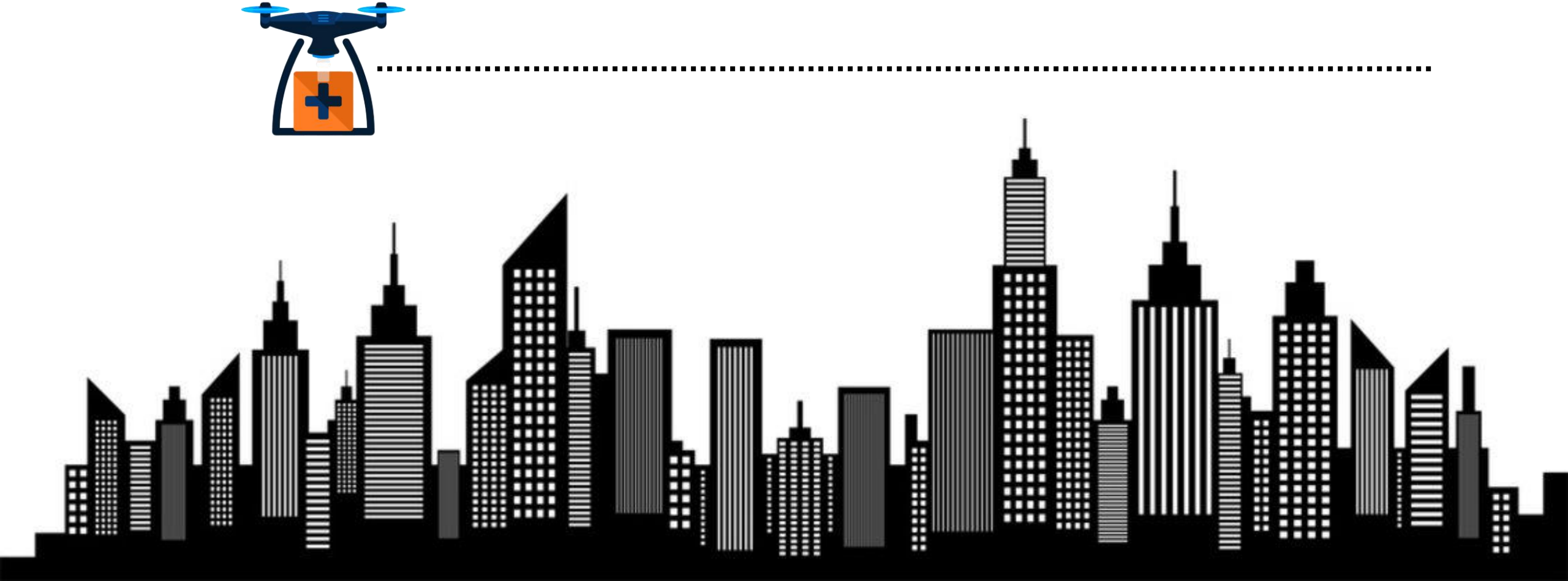

Efforts in Securing RVs

Attack Detection, Anomaly Detection

Invariant Based Detection

Model based Detection

"Very Effective in Detecting Attack"

Choi et. al., Detecting Attacks against Robotic Vehicles: a Control Invariant Approach, CCS'18
Quinonez et. al., SAVIOR: Securing Autonomous Vehicles with Robust Physical Invariants, Usenix Security'20

Detection is not Enough …

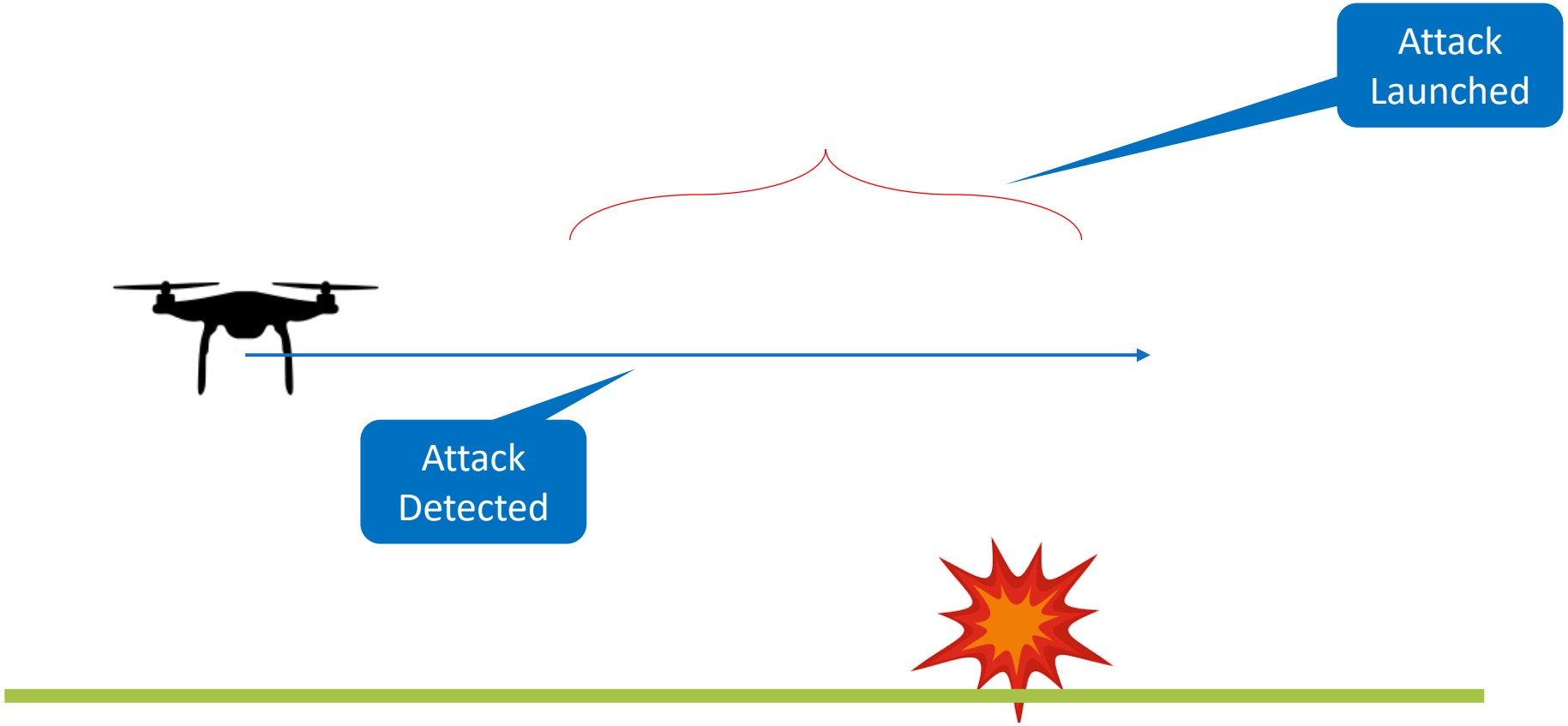

Choi et. al., Detecting Attacks against Robotic Vehicles: a Control Invariant Approach, CCS'18
Quinonez et. al., SAVIOR: Securing Autonomous Vehicles with Robust Physical Invariants, Usenix Security'20

Failsafe is not enough either…

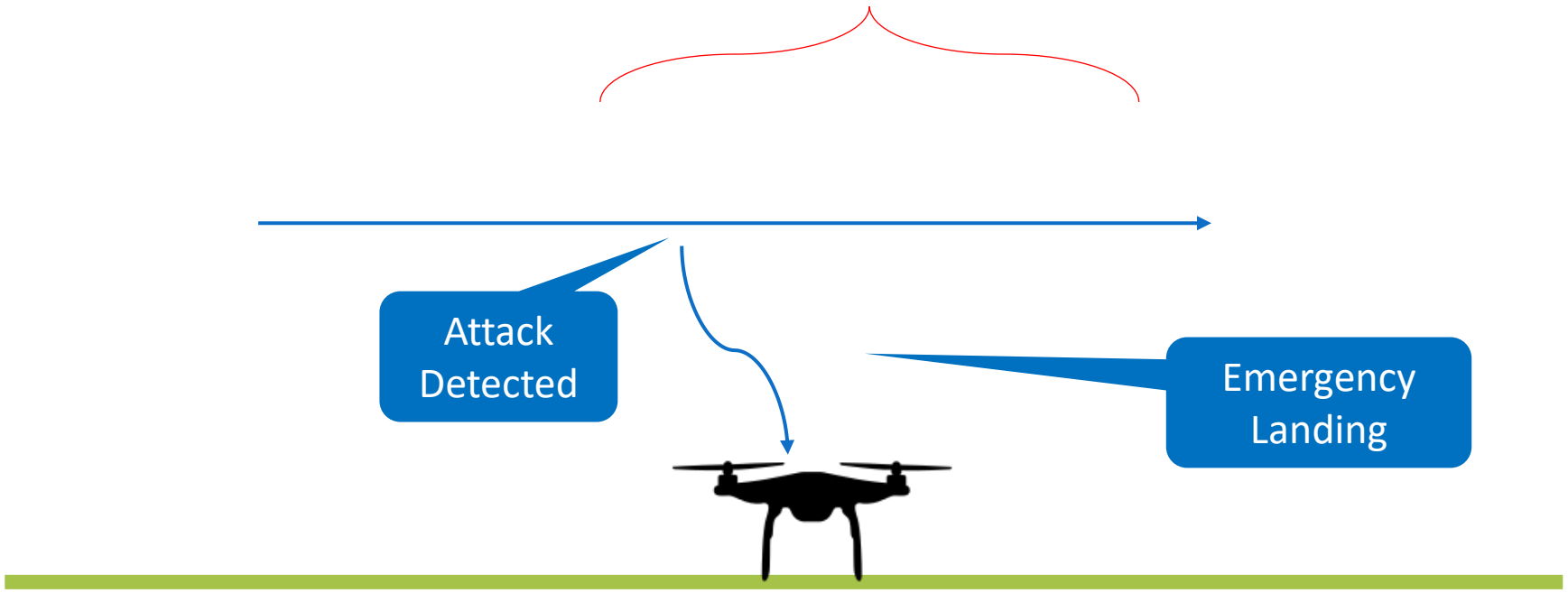

How to safeguard RVs and ensure safety?

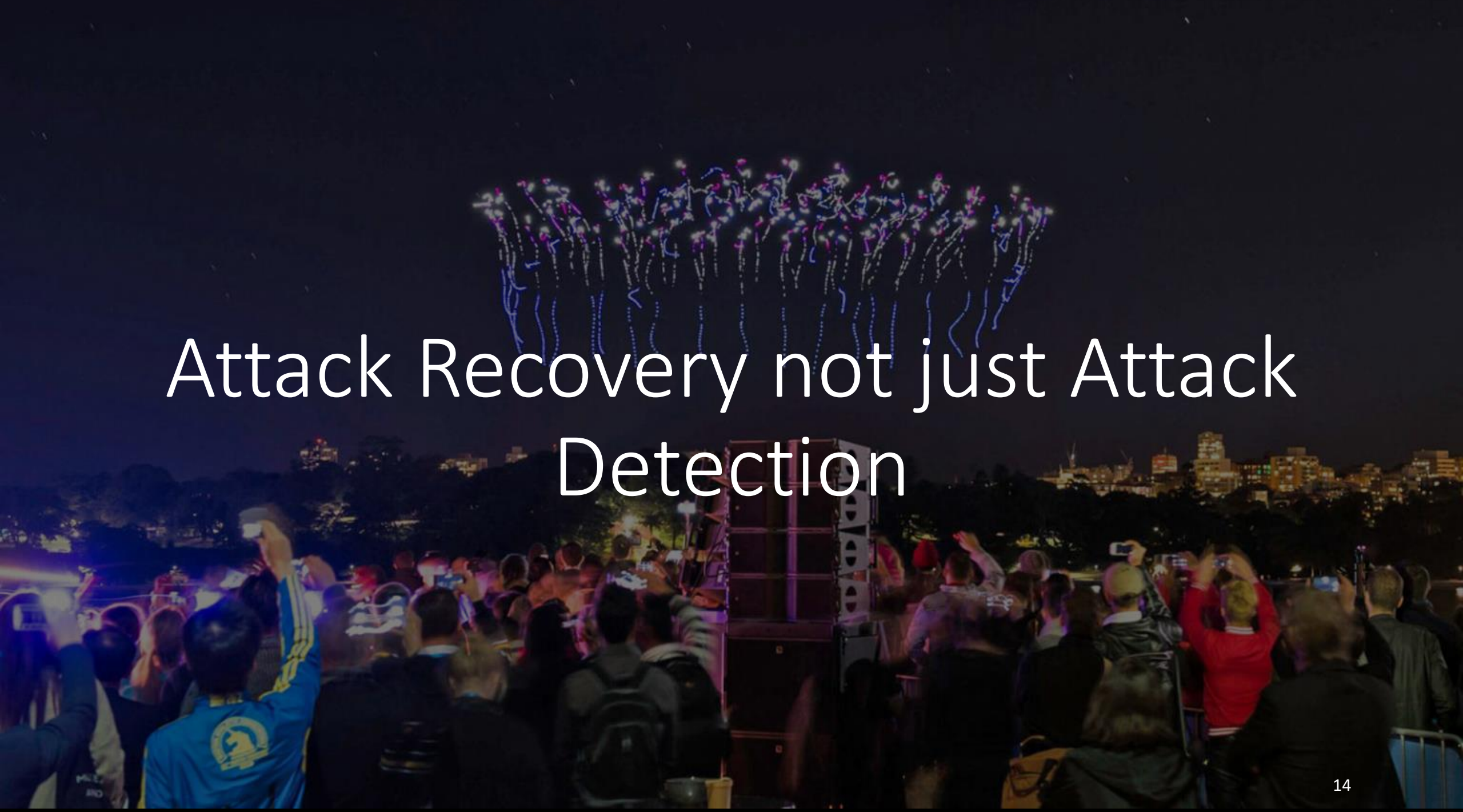

Attack Recovery not just Attack Detection

Feed-forward Control

Historic State Replay

Feed-forward Control

Historic State Replay

How sensor attacks disrupt RVs?

Sensor → PID Control → Actuator Signal

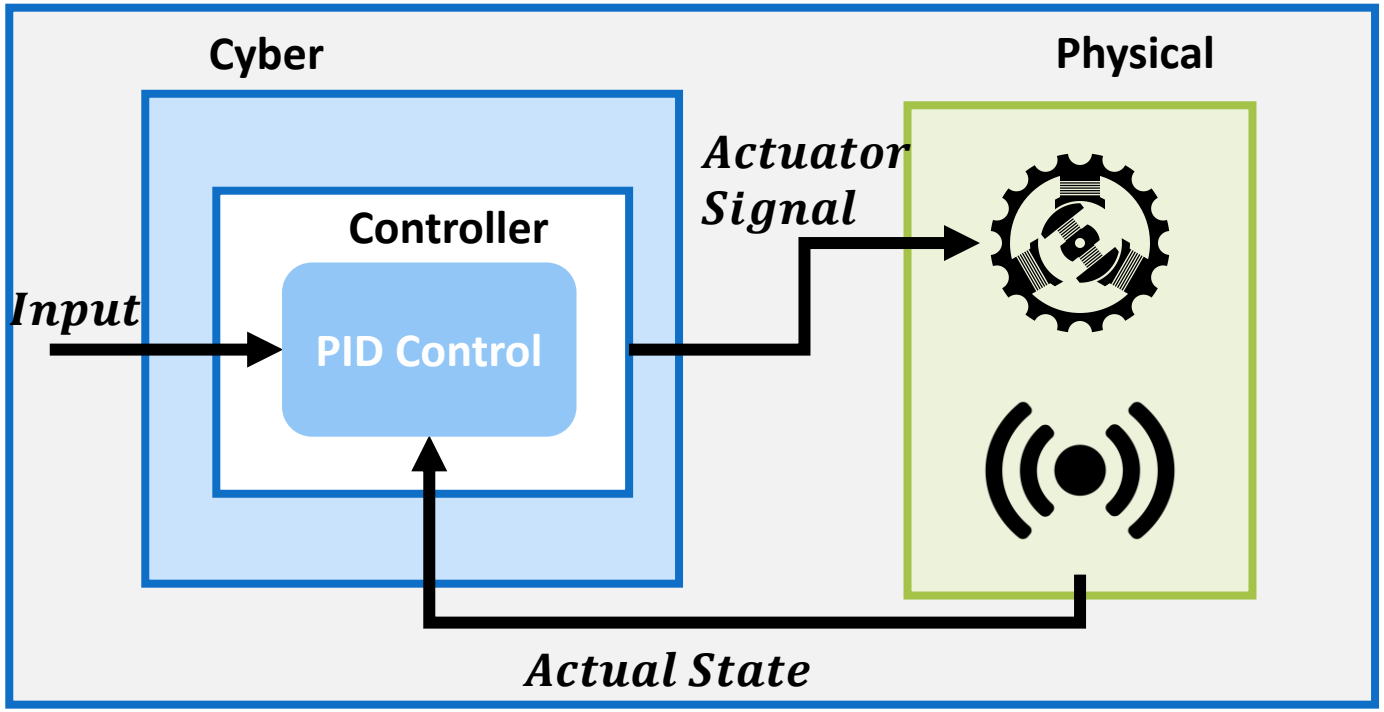

PID Control (Proportional Integral Derivative)

Sensor → PID Control → Actuator Signal

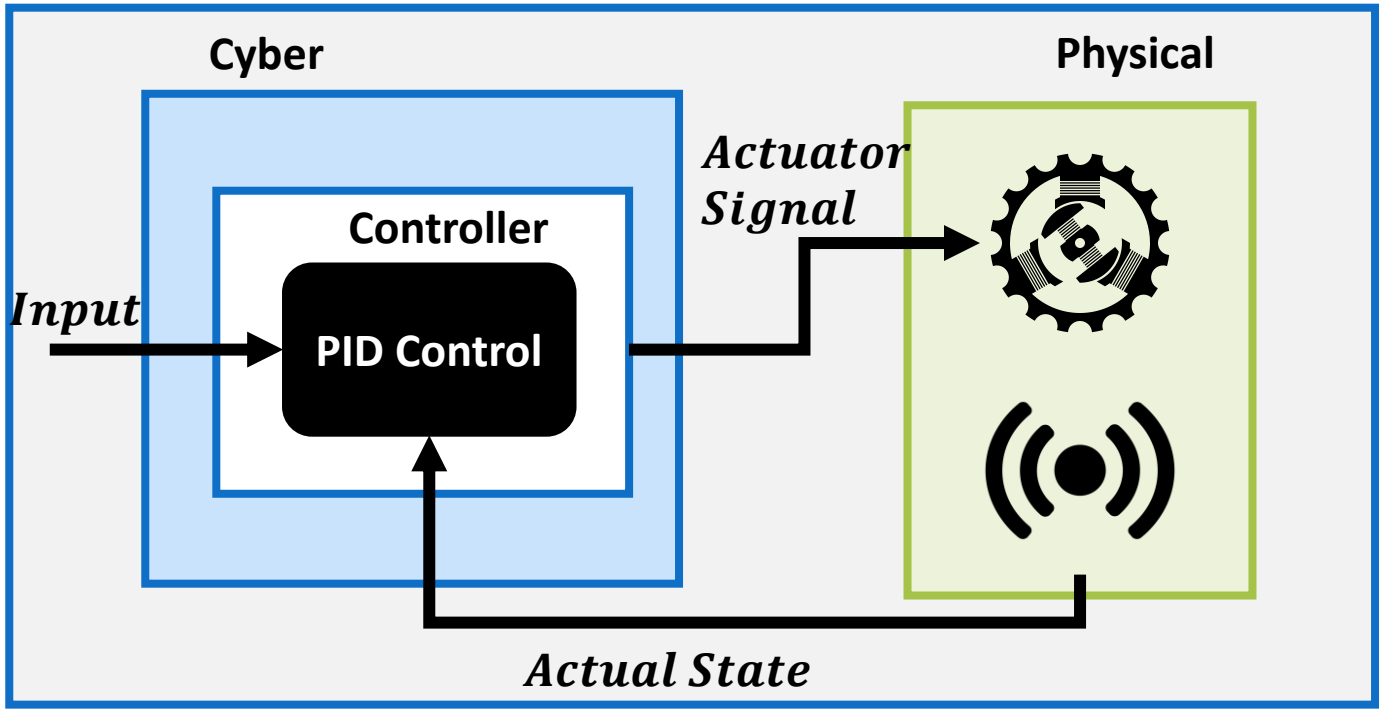

Sensor → PID Control → Actuator Signal

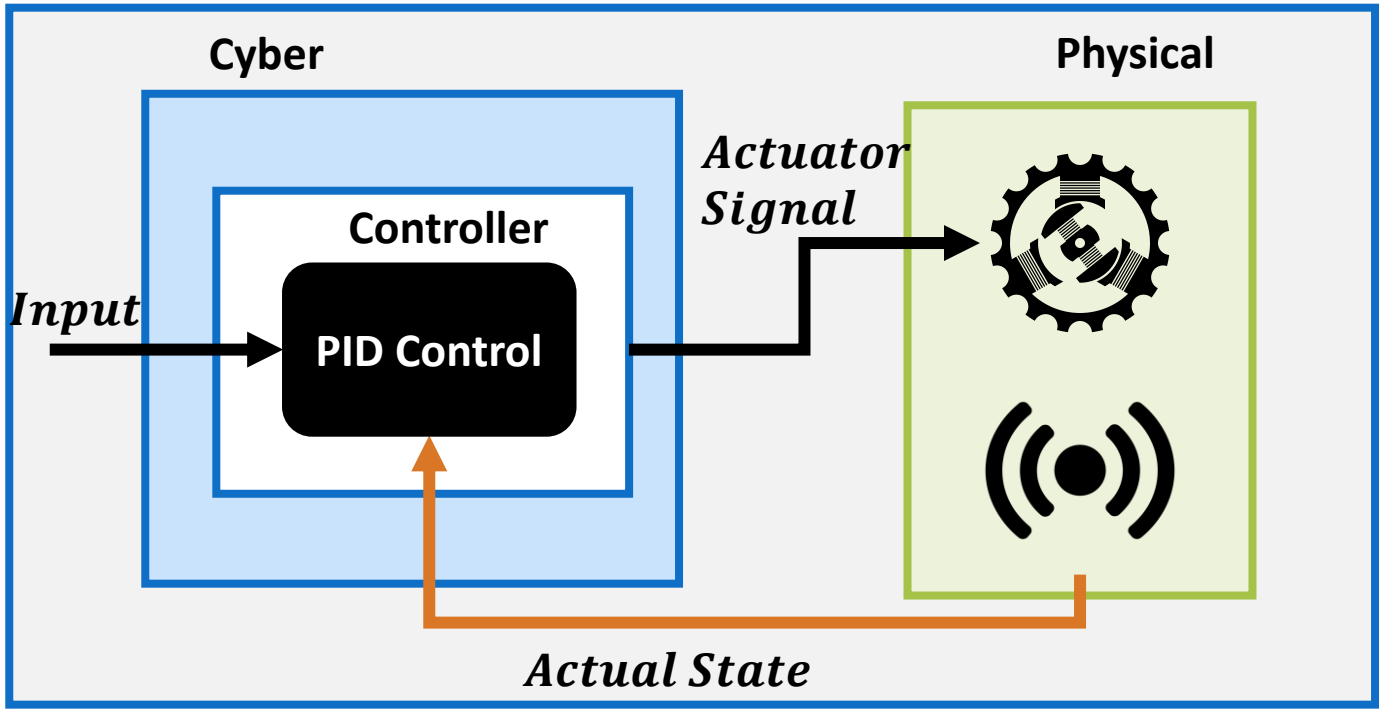

Sensor → PID Control → Actuator Signal

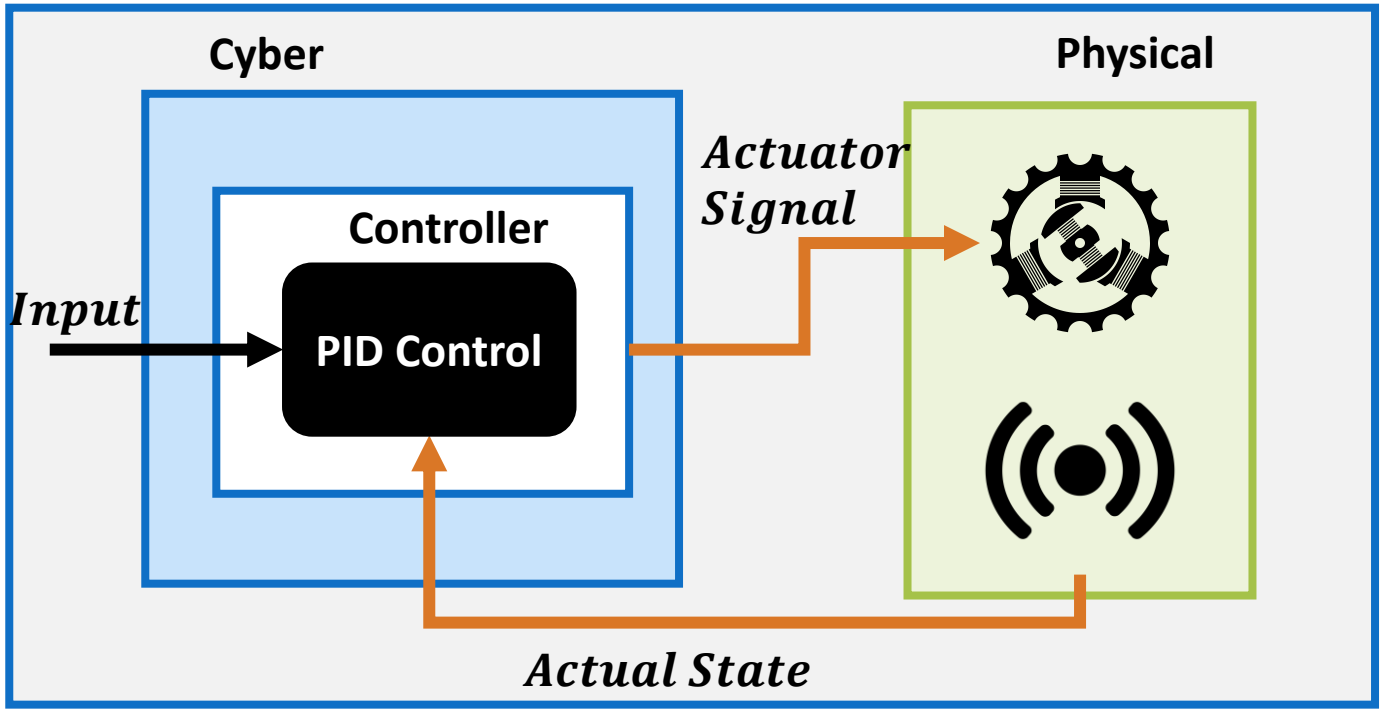

RV under Attack

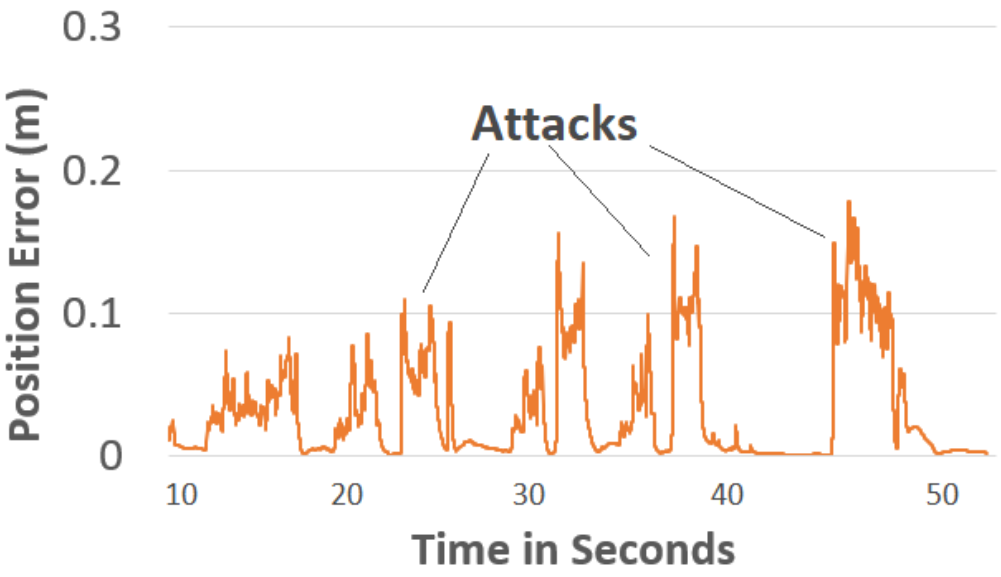

PID Over-Compensates under Attacks

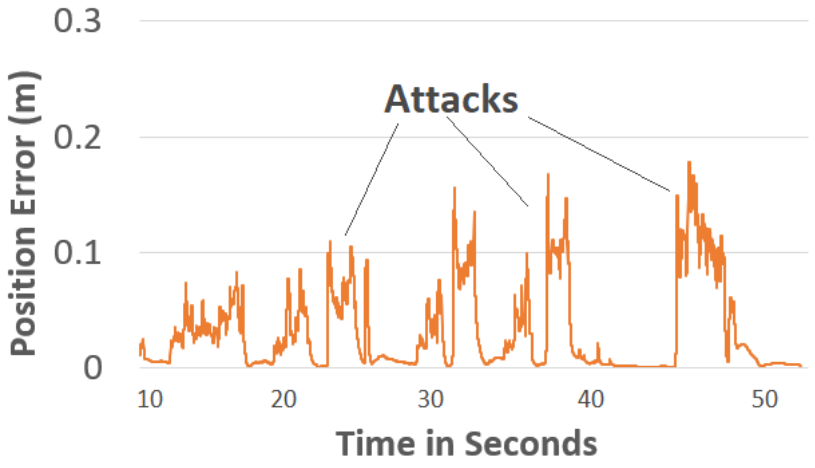

PID Over-Compensates under Attacks

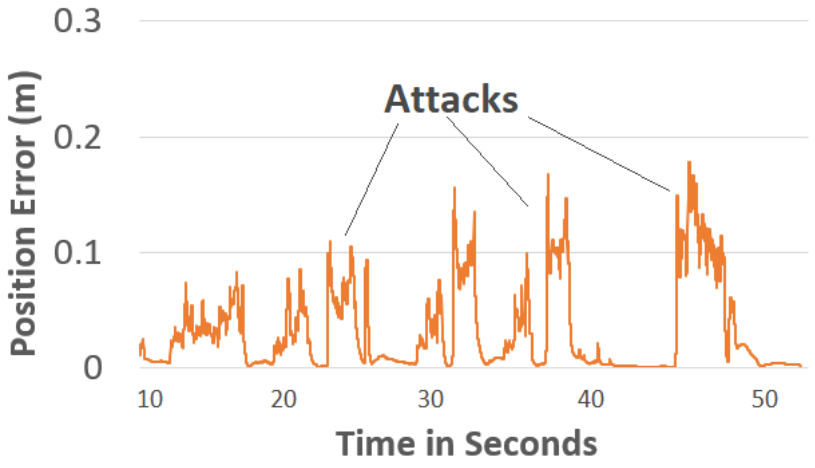

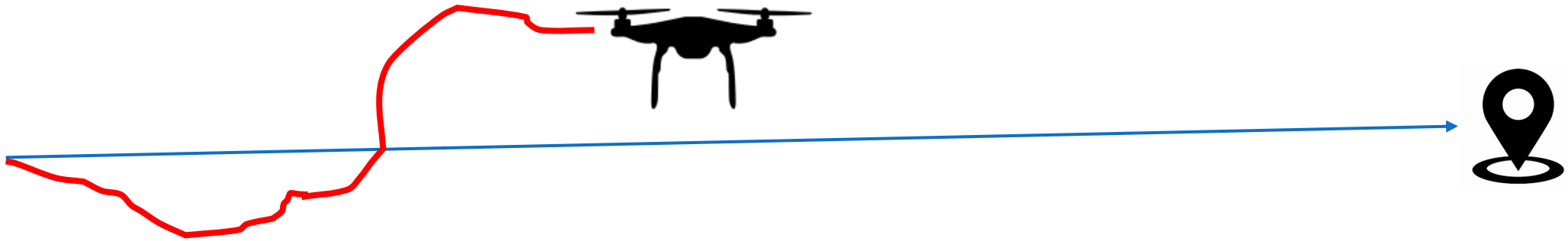

PID Over-Compensates under Attacks

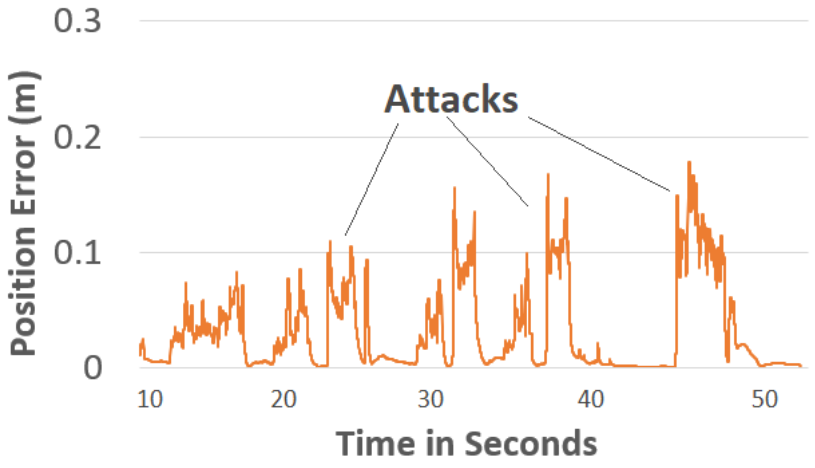

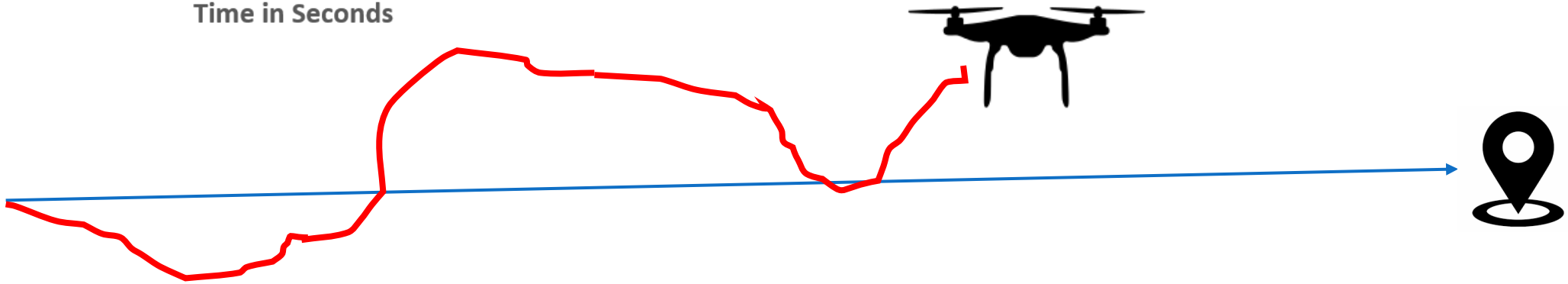

PID Over-Compensates under Attacks

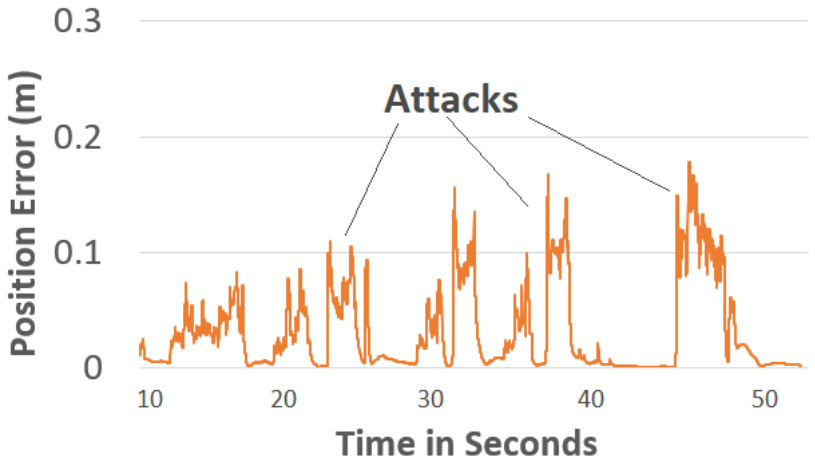

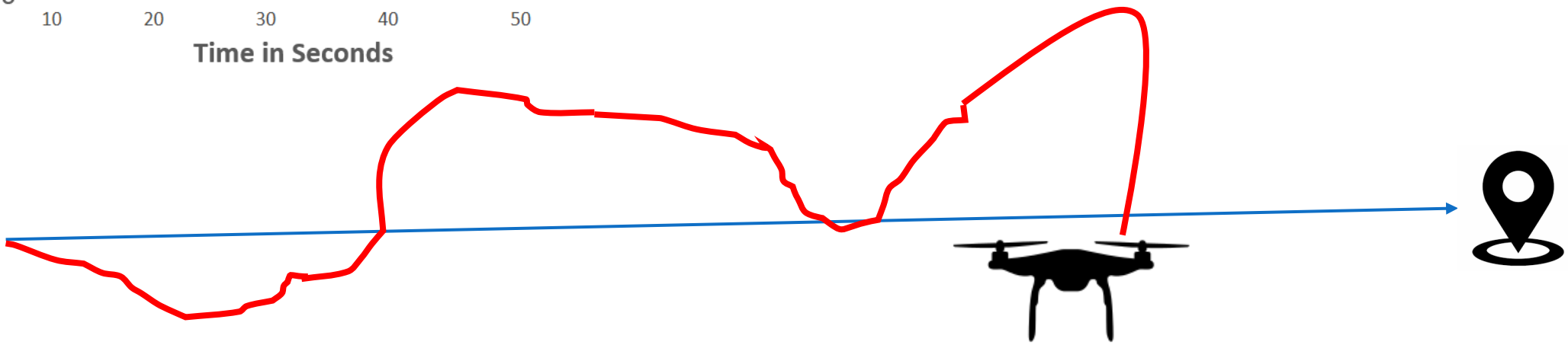

PID Over-Compensates under Attacks

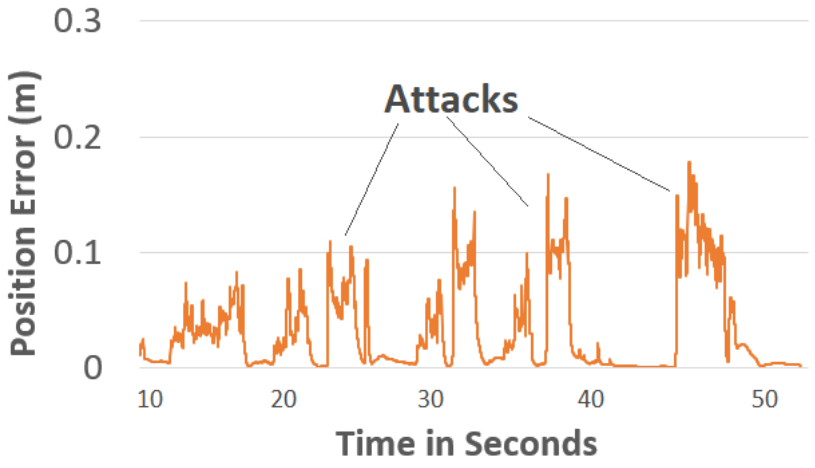

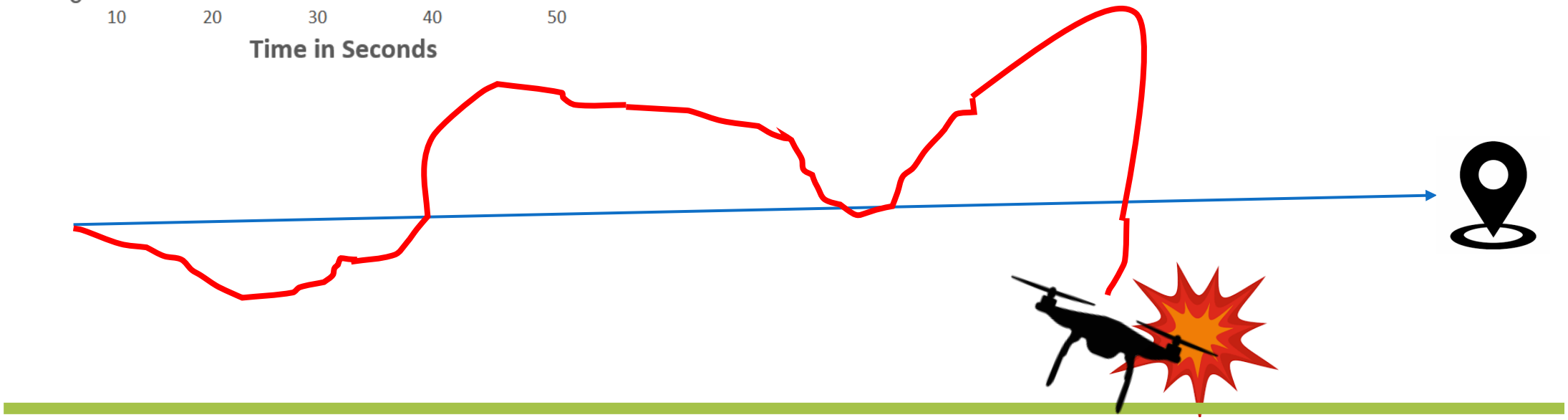

PID Over-Compensates under Attacks

PID compensation → handling faults ✓

under attacks ✗

Approach to design Recovery Techniques

Recovery Requirements

R1: Handle persistent errors → erroneous physical states

R2: Prevent erroneous actuator Signals

Feedforward Controller (FFC) Design

Feedforward Control

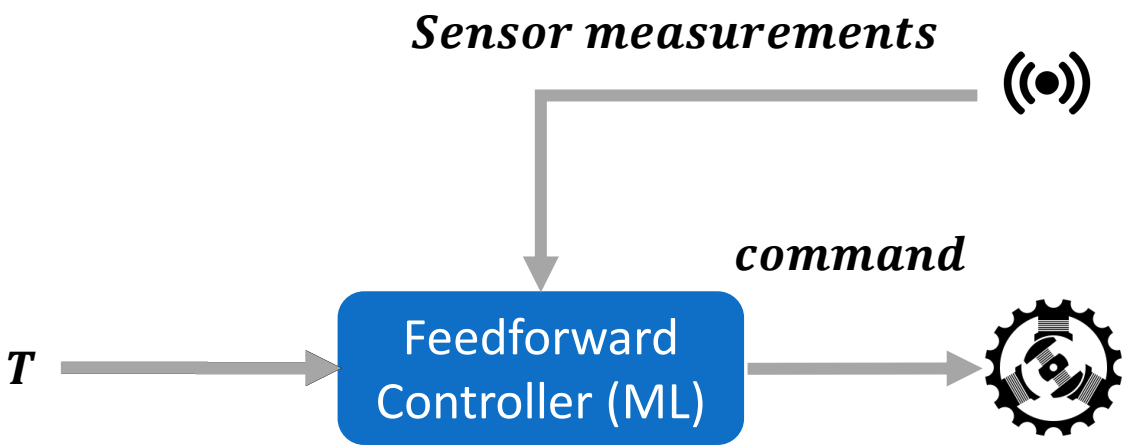

Recovery Requirements

R1: Prevent erroneous physical states

R2: Prevent erroneous actuator signals

Recovery Framework

Feedforward Control

Feedback Control

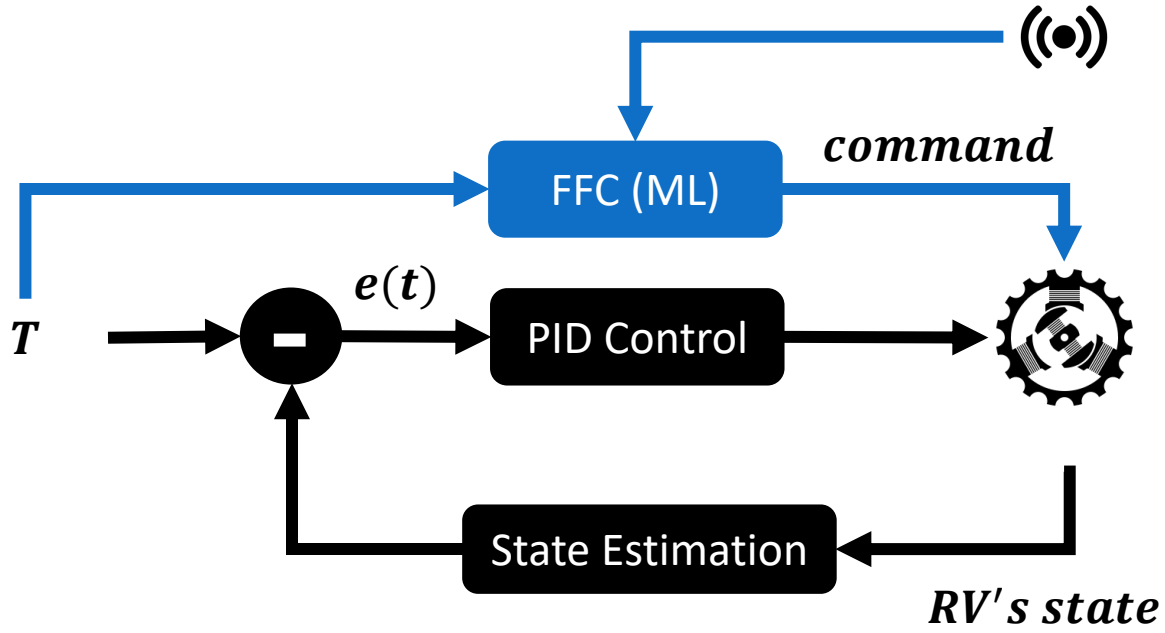

Recovery Framework

Feedforward Control

Feedback Control

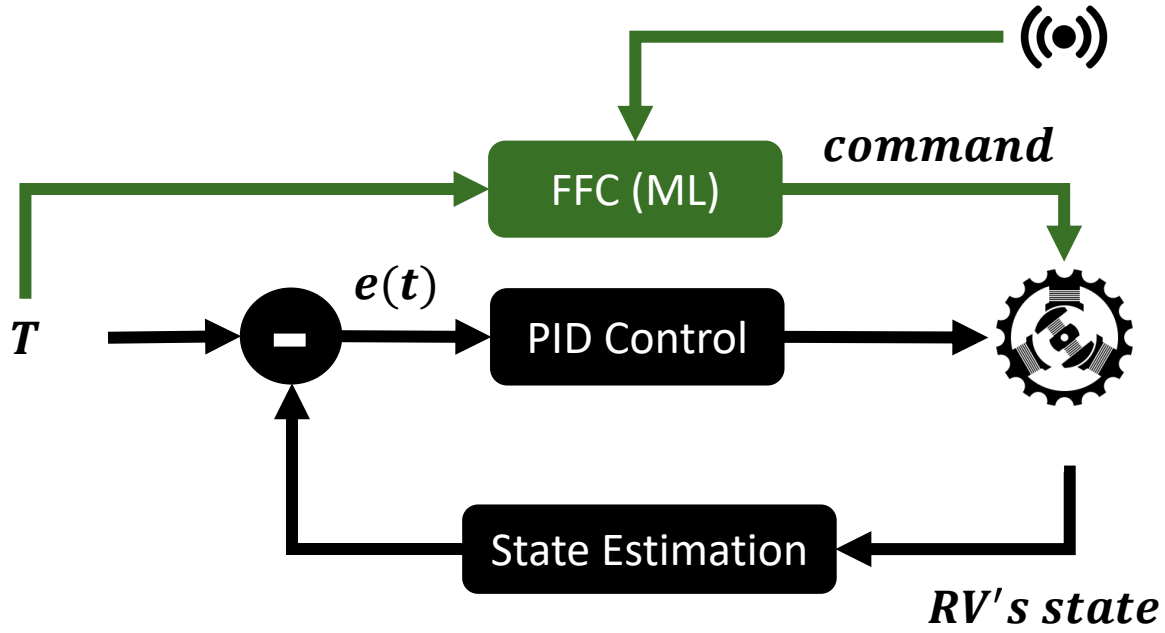

Recovery Framework

Feedforward Control

Feedback Control

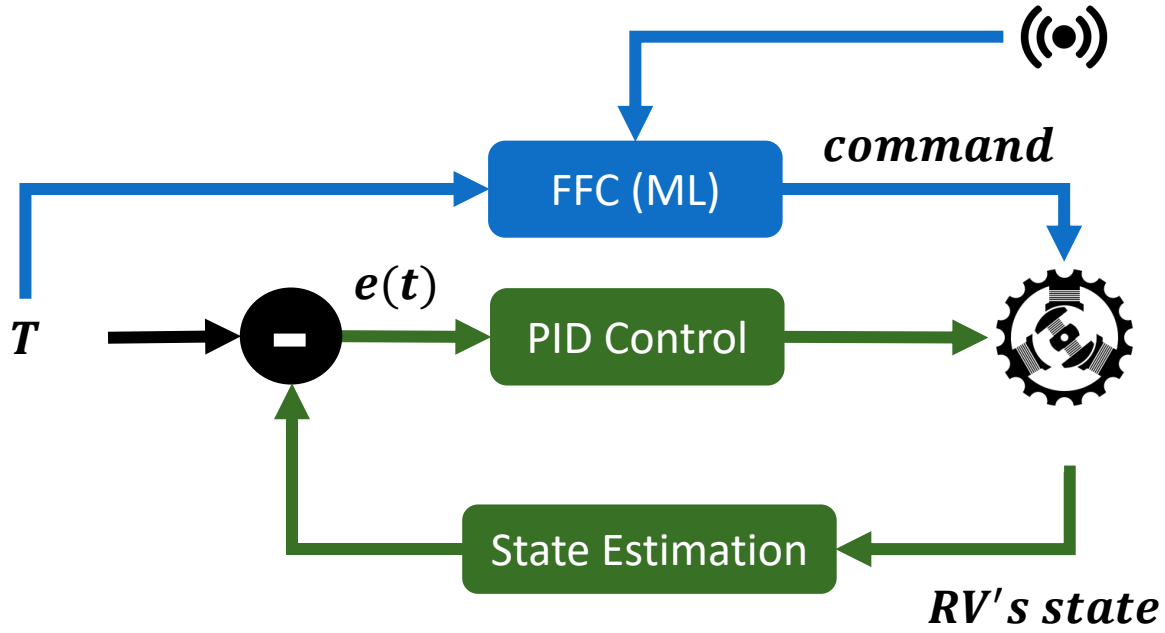

Feed-Forward Control

- Prevents crashes – 0 crash.
- Ensure mission success despite attacks.
- ~1% energy overhead.
- ~7% performance overhead.

Feed-Forward Control

Single Sensor under attack ✓

Multiple Sensors under attack ✗

Multiple Sensor under Attack

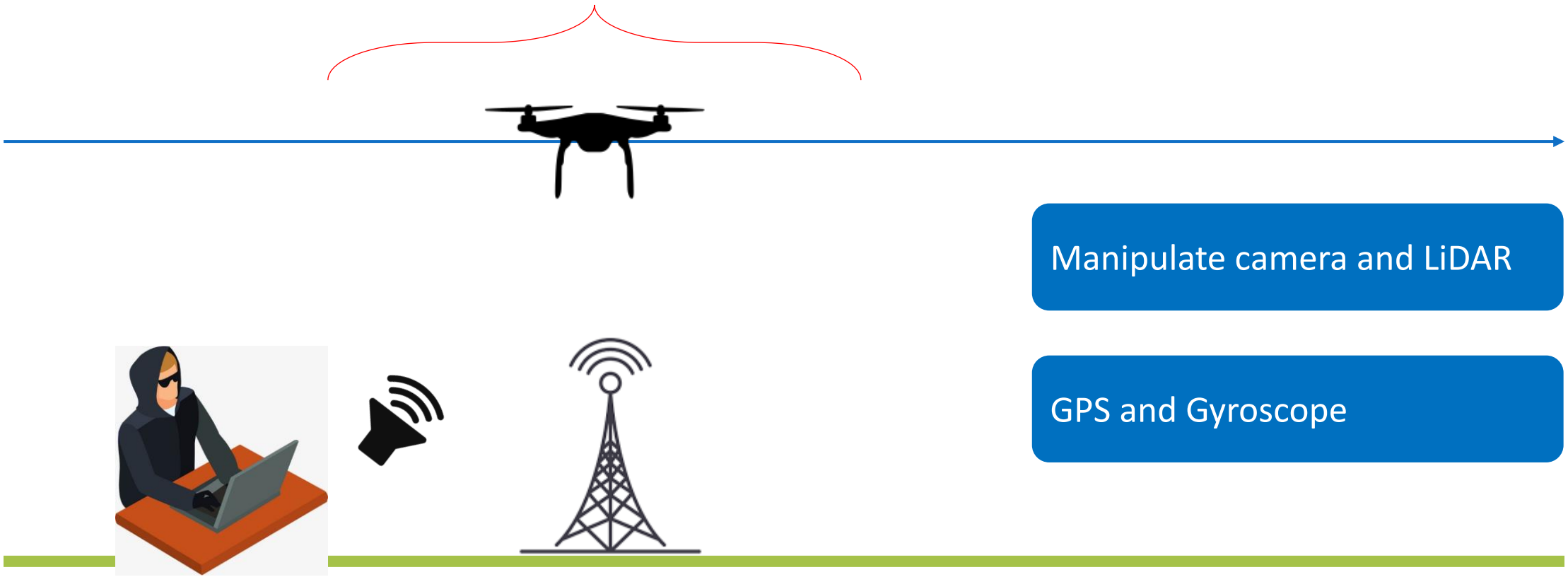

Cao et. al., Invisible to both Camera and Lidar, IEEE S&P 2021

Attack Setting

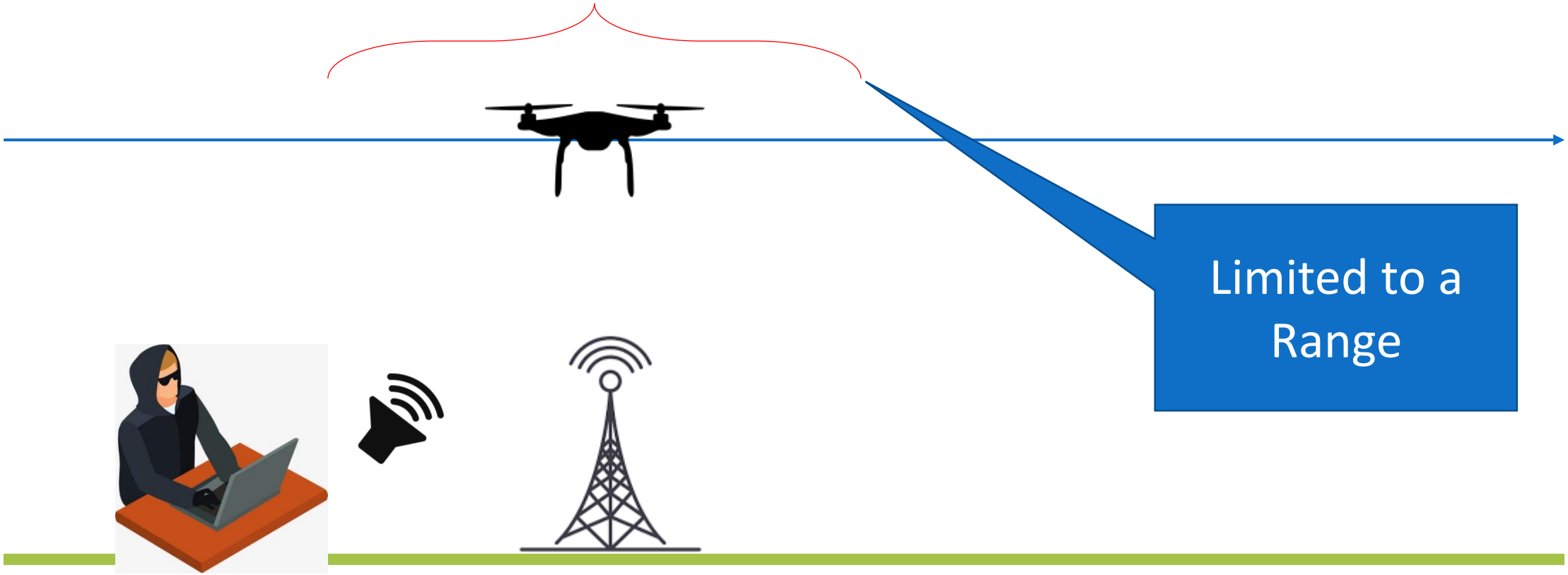

Cao et. al., Invisible to both Camera and Lidar, IEEE S&P 2021

Recovery Goal

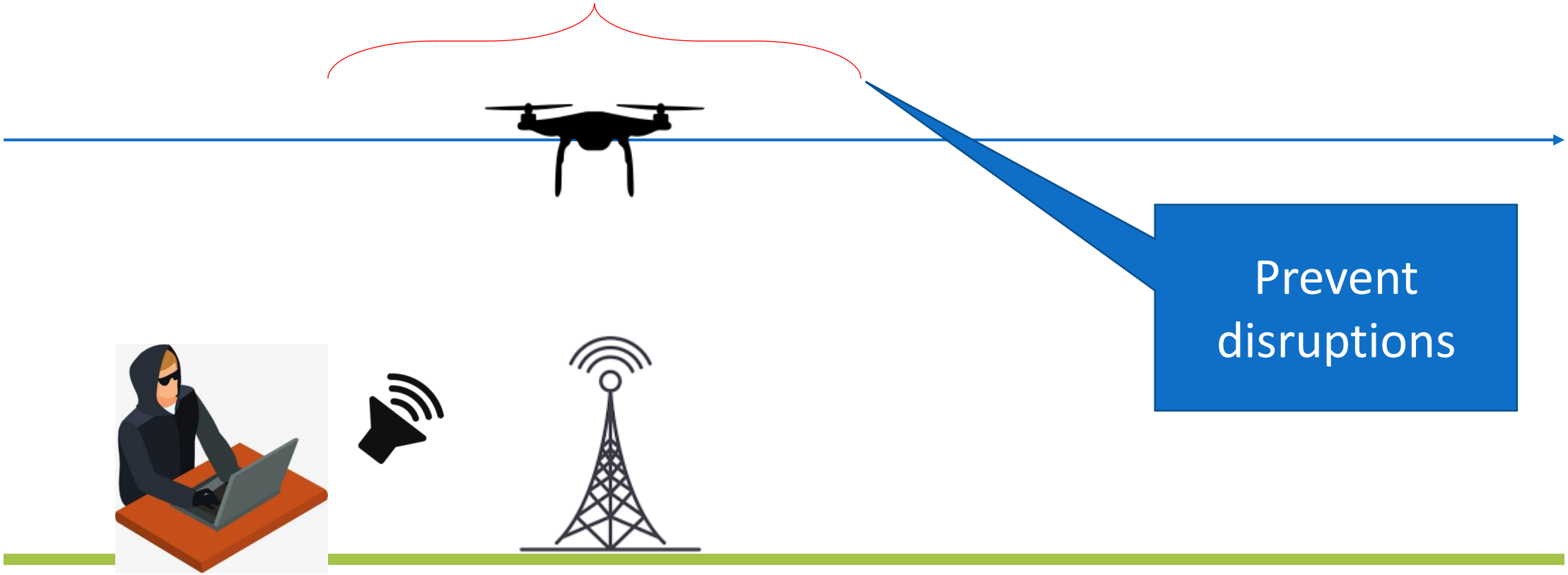

Cao et. al., Invisible to both Camera and Lidar, IEEE S&P 2021

Prevent Erroneous Actuator Signals

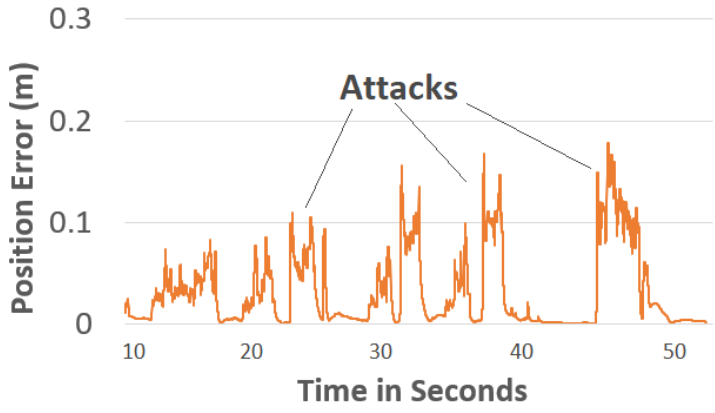

Recovery Requirements

R1: Prevent erroneous physical states

R2: Prevent erroneous actuator signals

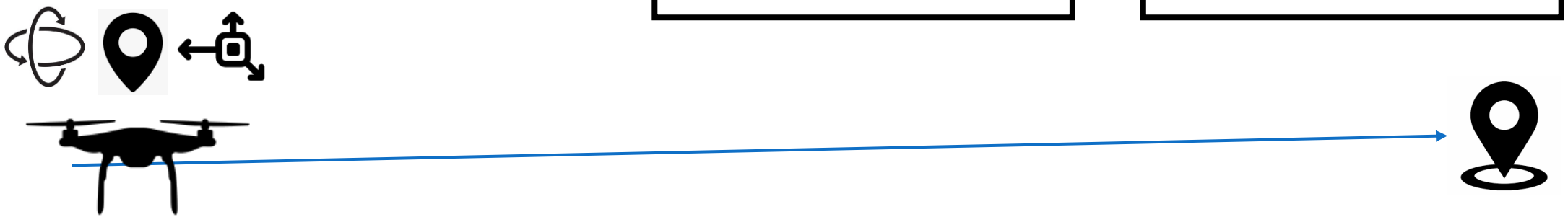

Prevent Erroneous Actuator Signals

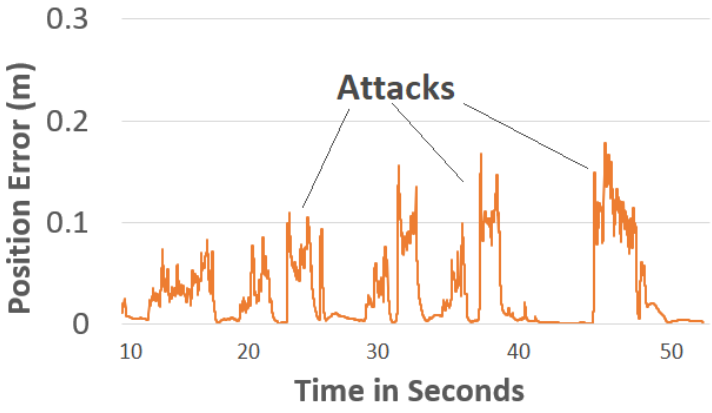

Recovery Requirements

R1: Prevent erroneous physical states

R2: Prevent erroneous actuator signals

Identify the Sensor(s) under attack

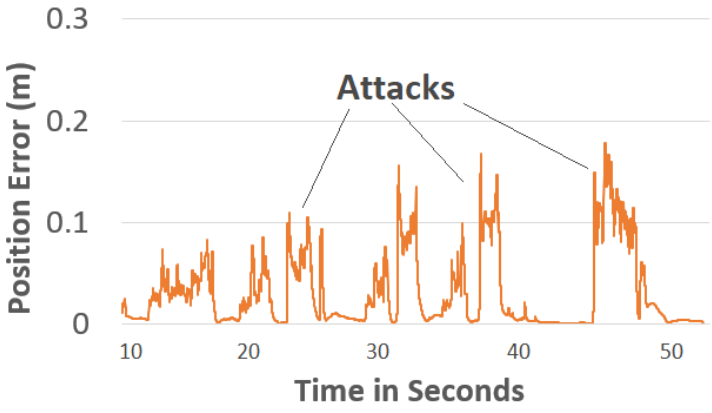

Recovery Requirements

R1: Prevent erroneous physical states

R2: Prevent erroneous actuator signals

Isolate Sensor(s) from Control Process

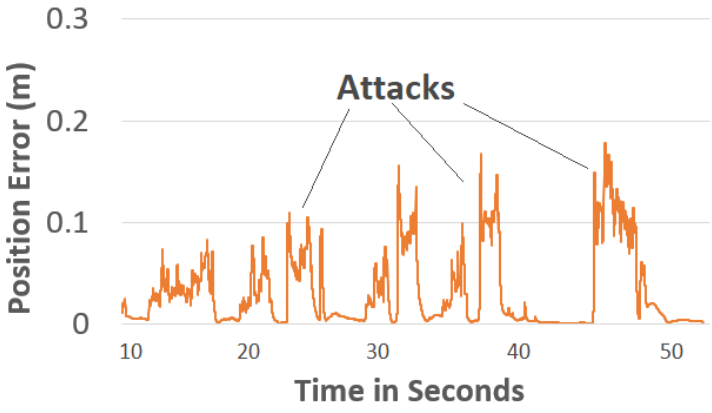

Recovery Requirements

R1: Prevent erroneous physical states

R2: Prevent erroneous actuator signals

Substitute Input Sequence

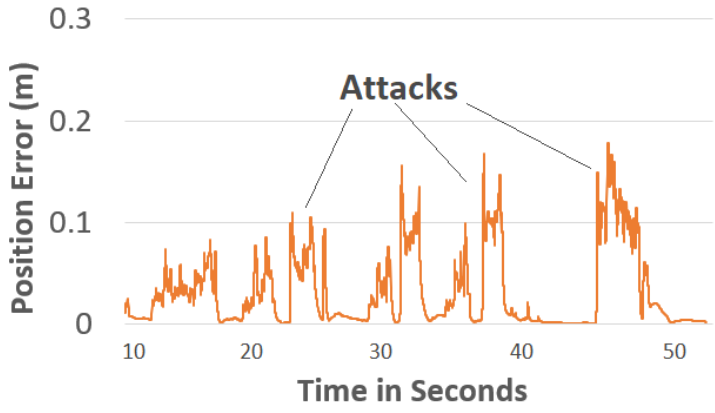

Recovery Requirements

R1: Prevent erroneous physical states

R2: Prevent erroneous actuator signals

Substitute Input Sequence: Historic States

Record Historical States

Position,
Velocity,
Angular rates…

Throttle

Substitute Input Sequence: Historic States

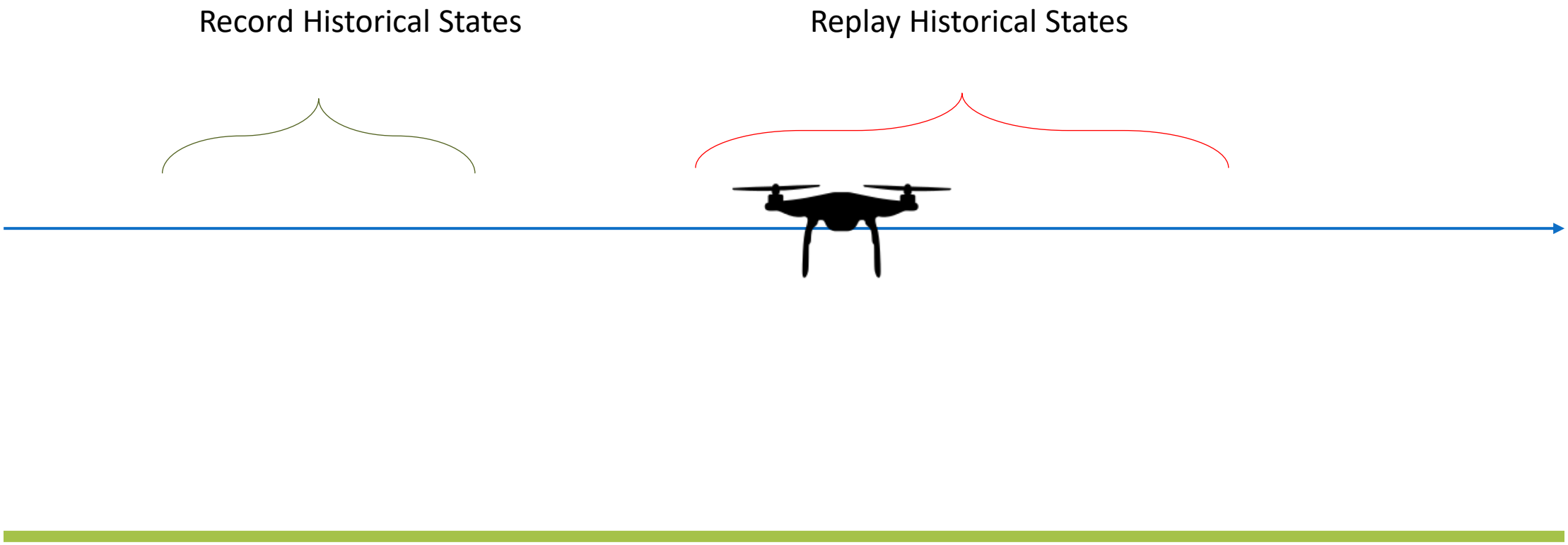

Substitute Input Sequence: Historic States

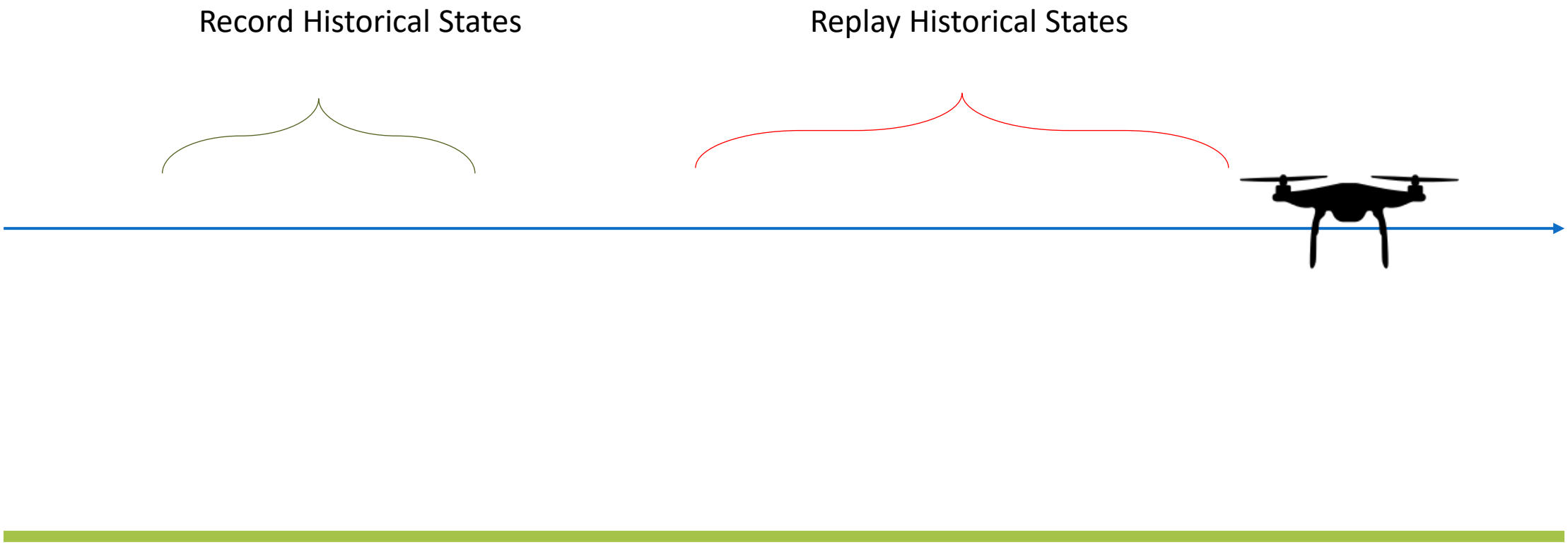

Isn’t replaying a type of attack?

How does this work?

Recovery with Historic State Input

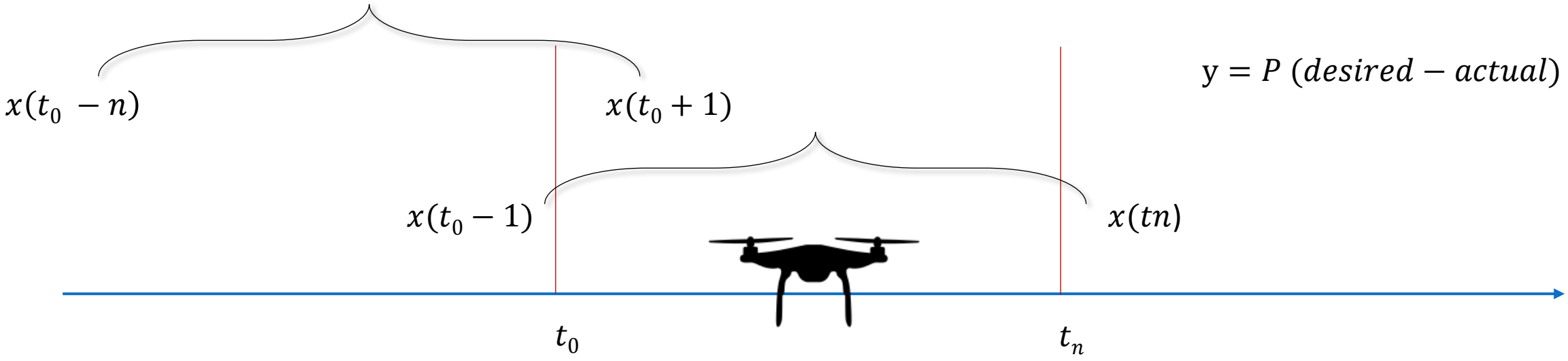

$$y = P\ (desired - actual)$$

Replay Historical States

Recovery with Historic State Input

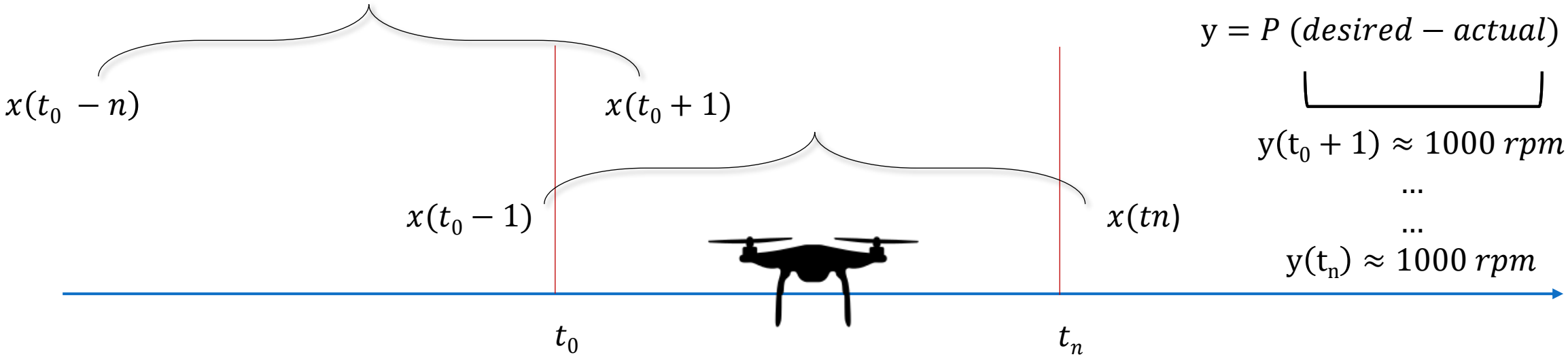

Replay Historical States

Without Recovery

Without Recovery

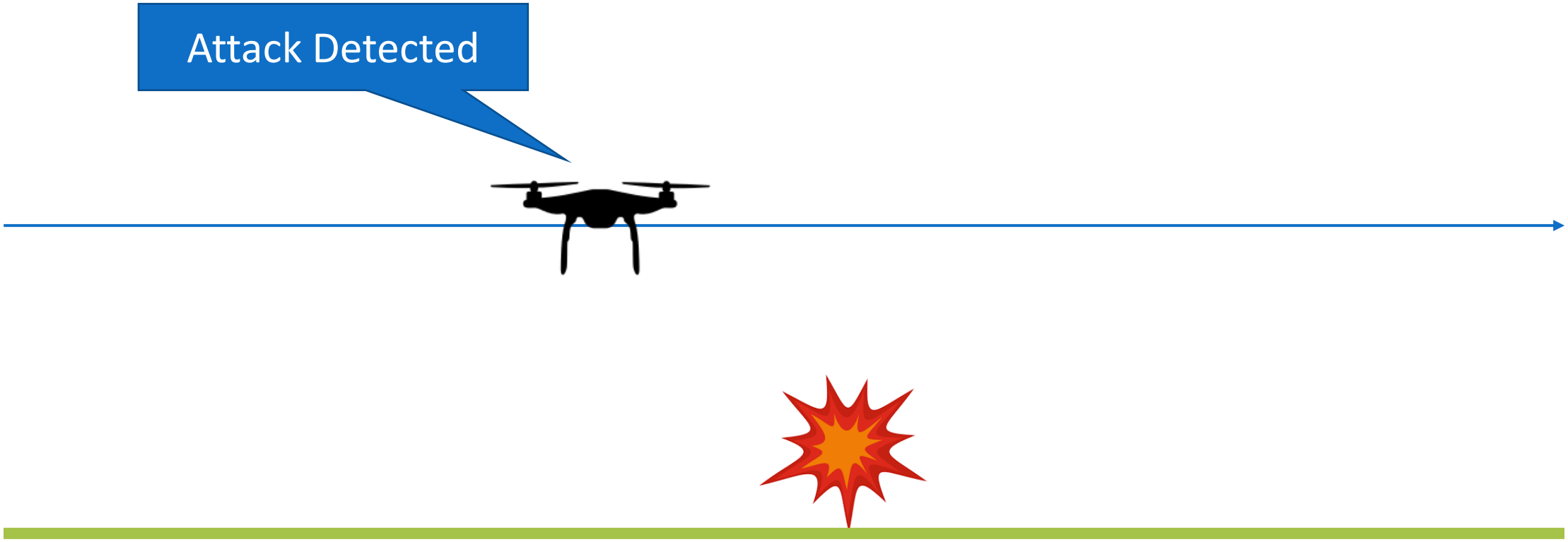

With Recovery

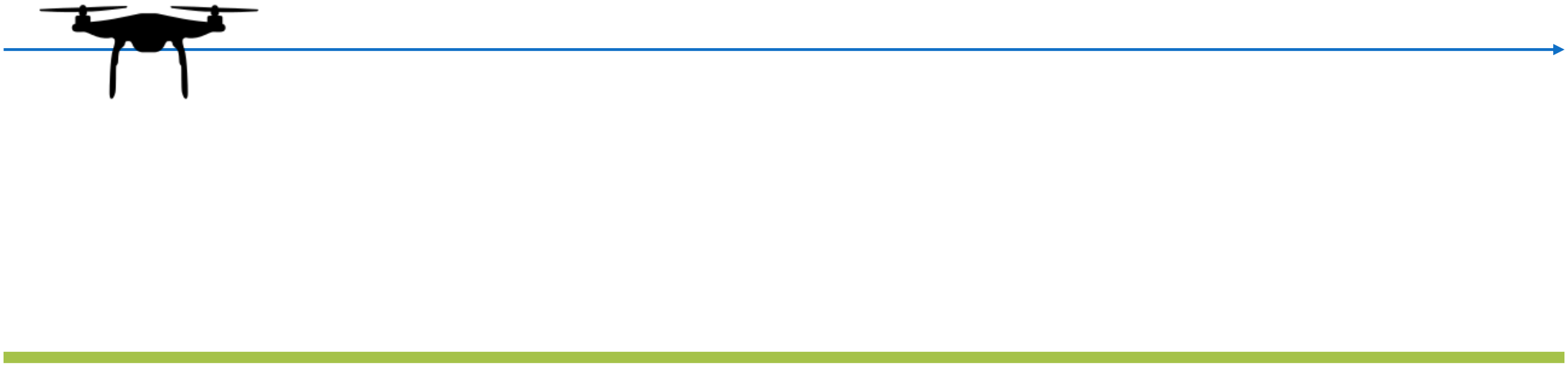

With Recovery

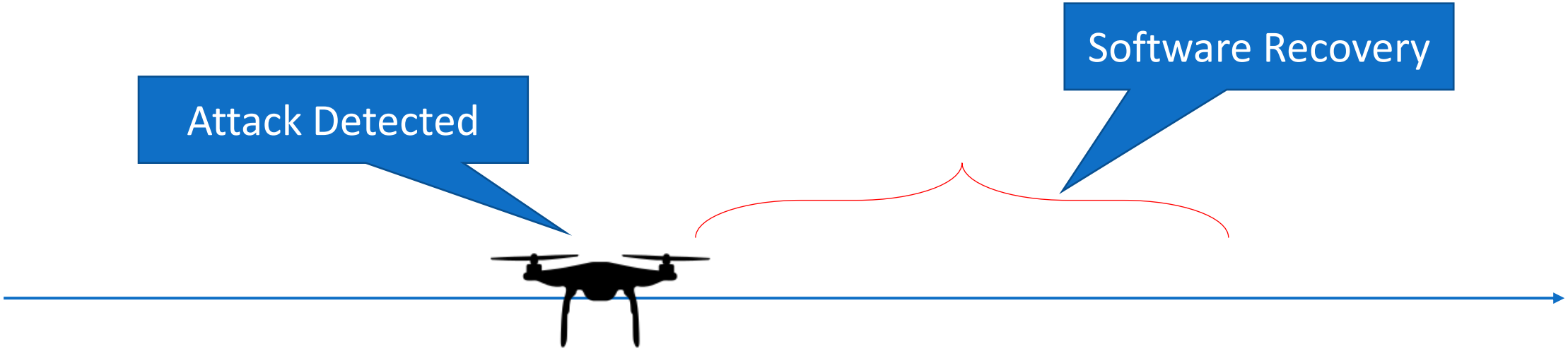

Detection is not Enough

Attack Resilience is the step towards safe and robust autonomous RVs

Software solutions can offer low-cost attack recovery.

Contact Pritam Dash, pdash@ece.ubc.ca